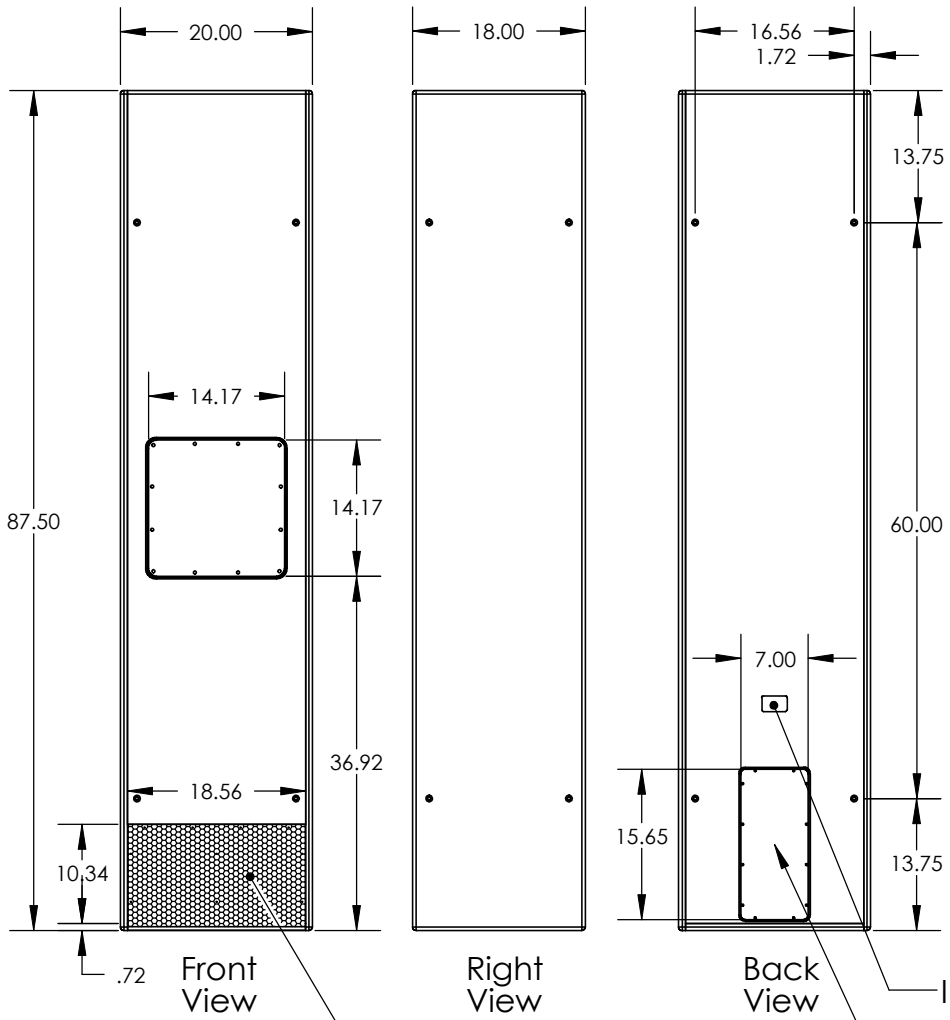

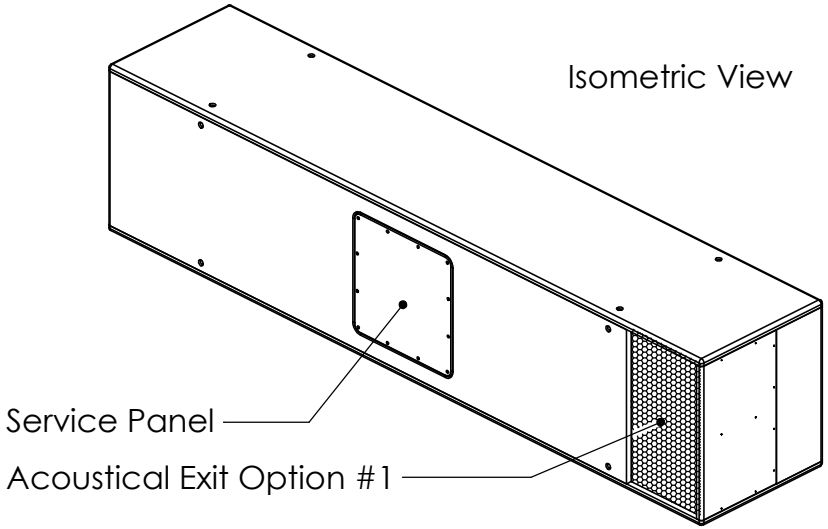

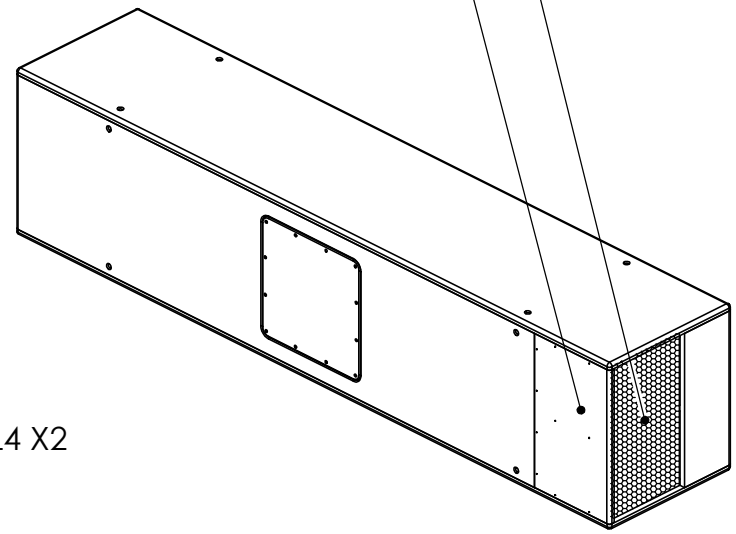

◉ = Suspension Point Symbol	Suspension Points:
◕ = Center of Gravity Symbol	16 Places Total (4 on each Long Side)

PROPRIETARY AND CONFIDENTIAL
THE INFORMATION CONTAINED IN THIS DRAWING IS THE SOLE PROPERTY OF QUALITY MUSICAL SYSTEMS, INC. ANY REPRODUCTION IN PART OR AS A WHOLE WITHOUT THE WRITTEN PERMISSION OF QUALITY MUSICAL SYSTEMS, INC. IS PROHIBITED.

MATERIAL
FINISH
DO NOT SCALE DRAWING

UNLESS OTHERWISE SPECIFIED:
DIMENSIONS ARE IN INCHES
TOLERANCES:
FRACTIONAL ±
ANGULAR: MACH ± BEND ±
TWO PLACE DECIMAL ±
THREE PLACE DECIMAL ±

DRAWN	TBW	10/7/2009
ENG APPR.		
MFG APPR.		
Q.A.		

Danley Sound Labs

TITLE: DTS-20

SIZE A | Plan View Drawing | REV B

Last Save Date: Wednesday, October 07, 2009 9:04:57 AM

5 4 3 2 1