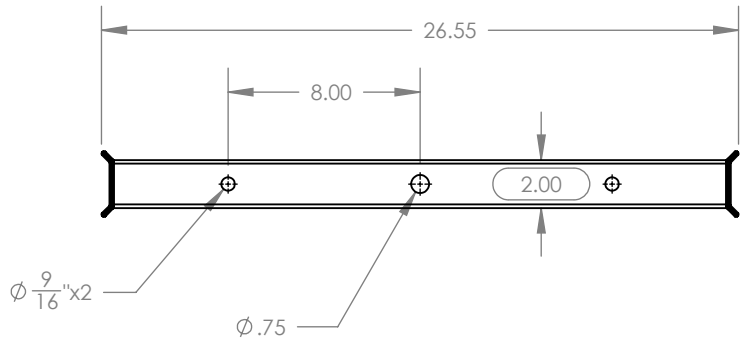

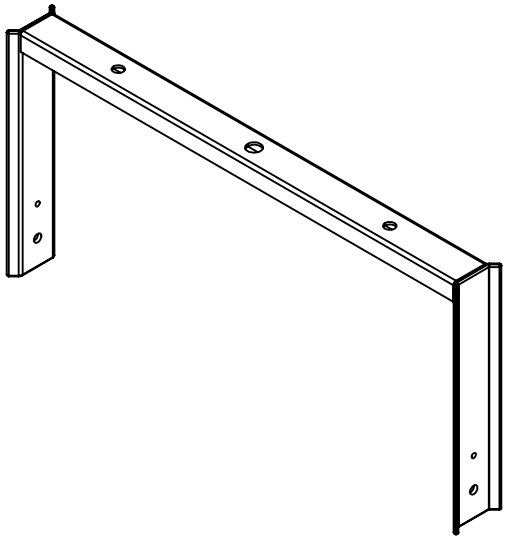

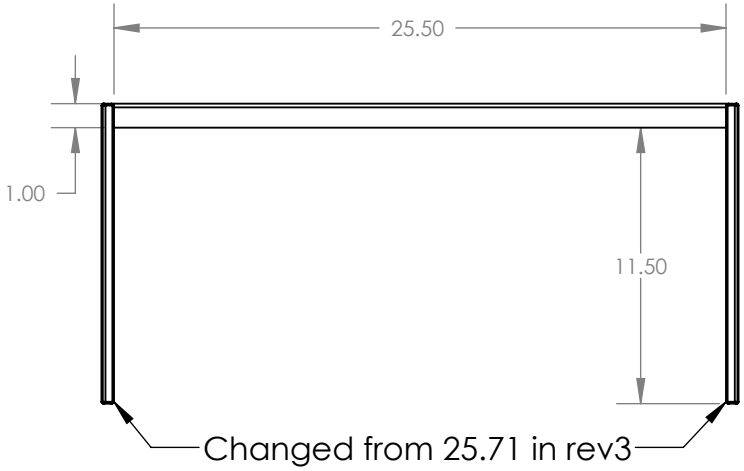

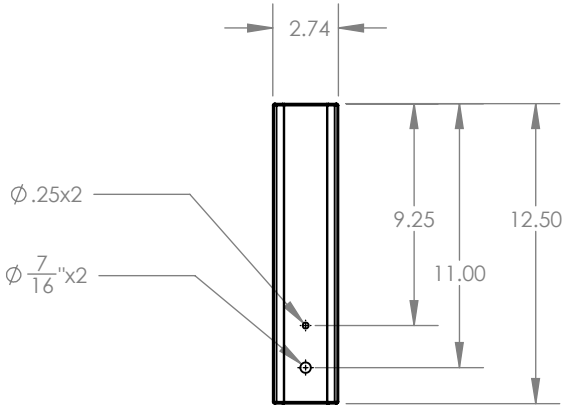

PROPRIETARY AND CONFIDENTIAL THE INFORMATION CONTAINED IN THIS DRAWING IS THE SOLE PROPERTY OF DANLEY SOUND LABS, INC. ANY REPRODUCTION IN PART OR AS A WHOLE WITHOUT THE WRITTEN PERMISSION OF DSNLEY SOUND LABS, INC. IS PROHIBITED.	MATERIAL	UNLESS OTHERWISE SPECIFIED:	DRAWN	CBH	10/16/2018	Danley Sound Labs
	FINISH	DIMENSIONS ARE IN INCHES TOLERANCES: FRACTIONAL ± ANGULAR: MACH ± BEND ± TWO PLACE DECIMAL ± THREE PLACE DECIMAL ±	ENG APPR.			TITLE: SM80 U Bracket
	DO NOT SCALE DRAWING		MFG APPR.			SIZE **A** REV:5
			Q.A.			SCALE: 1:8 Last Save Date: Tuesday, October 16, 2018 1:33:00 PM

5 4 3 2 1